GearSim Software Description

A High-Fidelity Landing Gear Simulation Software Tool for Enhanced Ground Loads Prediction and Landing Gear Systems Analysis

SDI Engineering Inc.

4030 Lake Washington Blvd. NE #205

Kirkland, WA 98033-7870

Issue 1

June 29, 2018

EXECUTIVE SUMMARY

Aircraft landing gear consists of critical components that must be relied upon to function safely during the most challenging phases of flight. The landing gear consists of many coupled structures and systems, with modeling and simulation being increasingly utilized to analyze the load-carrying capability and dynamic response of these complicated structures. In response, SDI Engineering has developed GearSim, a high fidelity, landing gear modeling and simulation software tool that can be used in a range of applications, from a detailed system level landing gear analysis, to the evaluation of aircraft ground loads.

The industry standard methods for the prediction of loads during ground operations is typically accurate only at low speed taxi conditions, and tend to neglect the effects of important integrated systems such as steering and braking. Similarly, the design and analysis of landing gear subsystems often neglects the dynamic response of the landing gear and aircraft structures. The certification process for landing gear therefore usually requires flight testing, and can require significant cost and time.

GearSim provides a comprehensive analysis capability for low- and high-speed ground test cases with accurate modeling of aeroelastic effects, landing gear structural response, and dynamics of the associated integrated systems. It has been developed and validated over many years and with several industry partners. Further development is ongoing through collaboration with the USAF Landing Gear Test Facility, and major aircraft OEMs. The resulting software tool will streamline the design and analysis process, and reduce the required number of test cases in flight and ground tests required for aircraft certification. The anticipated benefit is a significant cost and time savings over the course of an aircraft design program.

A concise description of the overall approach to the software, the incorporated technology and tools, and the anticipated benefits of GearSim include the following:

Approach:

- Integrated modeling of landing gear dynamics with aeroservoelastic aircraft
- Simulation of the entire aircraft, landing gear facility testing, or individual performance evaluation of landing gear components
- Detailed, nonlinear landing gear subsystem analysis including braking, steering and tire dynamics
- Shimmy and gear walk stability analysis, and tire wear evaluation
- Propulsion and flight control system modeling, with integrated hydraulics and actuation systems
- Nonlinear, full aircraft aeroelastics with the option of linking CFD

Technologies and Tools:

- User-friendly MATLAB/Simulink environment allows multiple levels of built-in fidelity of subsystem models, with provisions to include proprietary models
- Aeroservoelastic analysis with nonlinear subsystem modeling (including actuators and sensors)
- Easily integrates with Nastran, and other 3rd party aeroelastic software
- Can link with CFD software for high-speed taxiing and improved ground effect modeling

Anticipated Benefits:

- Versatile and robust software capable of analyzing military and commercial aircraft
- Design process improvement for reliable evaluations of integrated design and performance
- Cost and timescale savings, with increased safety through reduced testing requirements and avoidance of hazardous test cases
- Enables the assessment of many additional scenarios that previously have not been readily amenable to reliable evaluation
- Certification support for multiple flight cases and configurations

TABLE OF CONTENTS

1 INTRODUCTION

A significant number of ground load tests are required in the aircraft certification process to assure the aircraft's structure and landing gear perform safely under a wide range of ground operations. A reduction of the required number of test points in flight and ground tests will save significant cost and time during the design and analysis process, and can be achieved by using a reliable and accurate simulation capability. In addition, ground test simulations can provide improved prediction and understanding of extreme or difficult to obtain cases such as strong crosswinds, variable runway conditions, hard landings and abrupt maneuvers.

The industry standard methods for the prediction of loads during ground operations is accurate only at low speed taxi conditions. The prediction of loads is not as reliable under conditions where aerodynamic effects are significant, such as landing, high speed taxiing, and take-off. A comprehensive analysis of high speed ground test cases can be improved with accurate modeling of aeroelastic effects, landing gear dynamics, ground effects, runway conditions, wind strength and direction, and the forced displacement that drives the landing gear.

Modern aircraft landing gear consist of many complex, nonlinear subsystems including the landing gear structure, shock absorber, hydraulic steering, braking, antiskid system and tires. Interactions between these subsystems and the aircraft dynamics as a whole can lead to unfavorable phenomena such as nose-wheel shimmy, braking-induced vibration, and excessive tire wear or blowout. A capability that includes all of these effects will significantly improve the accuracy of ground loads analysis. This integrated capability allows evaluation of individual subsystem performance as well as the complex interactions that can lead to performance degradation of the entire landing gear. The availability of a generic ground loads analysis software tool is necessary because the methods and tools used by landing gear and brake manufacturers are typically proprietary, requiring engineering teams to generally use their own aircraft loads analysis tools.

The purpose of this software description document is to introduce GearSim, the high fidelity landing gear modeling software tool that SDI Engineering has developed, which can be used in applications ranging from a detailed system level landing gear analysis to the evaluation of aircraft ground loads. Technological advances in commercial and military aircraft have led to increased requirements on the landing gear system and increased demand for high fidelity analysis. SDI Engineering's integrated approach using GearSim will enable designers and loads engineers to meet these requirements while reducing program testing and certification costs.

2 HIGH FIDELITY LANDING GEAR SOFTWARE

GearSim is an accurate and user-friendly simulation tool for predictive ground loads and landing gear subsystem analysis. It can be used to simulate selected test points to reduce the extent of required ground loads tests, or in parametric studies to understand critical subsystem interactions. GearSim combines a high fidelity, nonlinear 6-DOF landing gear system modeling tool with variable fidelity aeroelastic simulation tools, in order to produce an efficient and accurate integrated simulation. Specifically, the simulation tool is compatible with a Nastran generated linear aeroelastic model for simpler problems, and has the ability to couple with full nonlinear FE/CFD aeroelastic simulation tools for highly complex, nonlinear, time-varying problems.

2.1 Background of the Software

Over many years and under contracts with various customers, SDI Engineering has developed a generic dynamic simulation software package for landing gear systems. The aim of this package is to represent

dynamic interactions between all of the important landing gear subsystems and the whole aircraft flexible flight dynamics in order to evaluate static and dynamic loads. In particular, an accurate representation of the aircraft, the landing gear flexibilities, the nonlinear subsystems, and the tire-runway interaction are considered to be particularly important.

The landing gear software package was further developed with funding from the USAF SBIR program. Throughout the course of a Phase I and two separate Phase II contracts, the capability was expanded to perform integrated, fully coupled FE/CFD/landing gear simulations. The landing gear software was re-structured to improve the software maintainability and usability by providing modularized component blocks to construct the landing gear model. A graphical user interface (GUI) was also added to give users the ability to easily and quickly build landing gear models, run simulations, and analyze results.

GearSim has been developed in cooperation with several industry partners in order to represent a wide range of commercial and military aircraft landing gear types. These relationships have also ensured that it adheres to industry-standard practices, standards, and quality procedures. Further benefits from these industry contacts have been in the specifications, requirements and validation from flight test data.

2.2 Validation History

GearSim has been validated using several data sets and many flight and ground test cases. References 1 and 2 provide background details of the methodologies employed in the basic software and some examples of its usage, while References 3 to 6 contain examples of validation against test cases.

In each validation activity, the test data was provided by the customer. The predicted loads and displacements were compared against the test data for parameters such as ground reactions, drag loads, shock absorber loads and travel, tire deflections, wheel spin speed, etc. A recent partnership with a commercial aircraft manufacturer began with their interest in GearSim as a comprehensive ground loads analysis tool. Using both flight test data and in-house simulation results, the ground loads capabilities of GearSim were validated, including the airframe and landing gear structural loads and subsystem dynamic behavior during takeoff, landing, and ground maneuvers of large commercial aircraft. GearSim was also configured to allow coupling with externally-defined aircraft and subsystem models. This functionality allows users to import their own steering, braking, and antiskid system models into a GearSim landing gear model, and connect with 3rd party CFD or aeroelastic modeling tools to represent the aircraft dynamics.

The sponsorship through the USAF Landing Gear Test Facility (LGTF) at Wright Patterson AFB, OH has also provided the opportunity for extensive validation and further development of GearSim. Validation activities included component-level testing as well as full landing gear drop test, shimmy and gear walk investigations, and tire modeling. The major landing gear subsystem models, including landing gear structure, oleo shock absorber, and wheel and tire dynamics were validated using LGTF test data. The LGTF personnel assisted in validating the stability analysis packages of GearSim through the use of dynamometer testing in which landing gear shimmy and gear walk events were induced through external excitation forces and the aircraft braking system, respectively. Through the use of the LGTF's state-of-the-art internal drum dynamometer, the tire and runway models were improved upon and validated.

2.3 Software Structure

GearSim is based in MATLAB/Simulink, which provides users easy access to a wide variety of industry standard engineering tools. Simulink provides a variety of robust solvers to integrate the equations of motion and the Simulink model provides a visual understanding of the interplay of subsystems. Users can easily connect their own proprietary analysis tools with the GearSim subsystem library blocks, allowing

full control over the definition of specific subsystems. The dynamic equations of the landing gear subsystems are modularized in Simulink library blocks.

The GUI consists of a series of menus that guide the user through the landing gear configuration and definition of all relevant subsystems. Subsystems such as the leg structure and bracing, oleo, and steering and braking systems are defined by engineering parameters readily available from the relevant drawings and specifications. GearSim then uses the landing gear configuration to generate a Simulink model using the library of subsystem blocks. The simulation can be run and post-processed within the GUI, providing relevant loads and stability results at the click of a button.

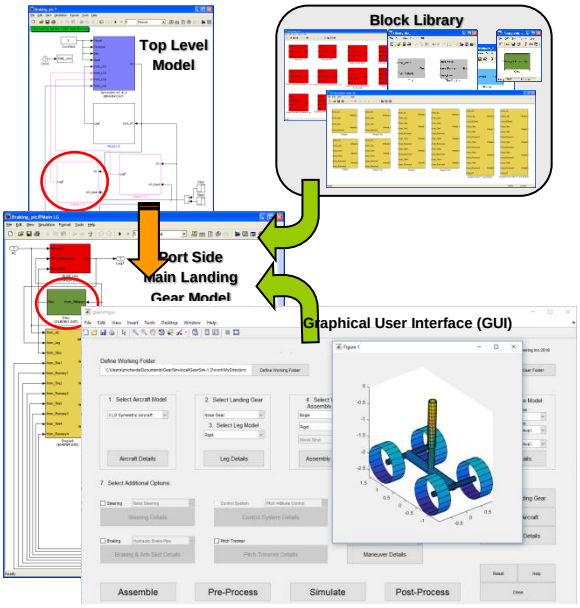

Simulink model code generation can be used to create efficient analysis models that can perform runs over many load cases or parametric trade studies in "batch mode." This configuration is suitable for trade studies where hundreds or even thousands of design points need to be analyzed. These features increase the applicability and ease of use of GearSim, and they are seamlessly integrated into the GUI for easy user access.

2.4 Modeling Capability

The software provides a detailed nonlinear simulation of an aircraft and its landing gear and all associated subsystems during take-off, landing, ground roll, braking, steering, taxiing and the general ground maneuvering phases. Subsystem models incorporate numerous levels of detail so that a user can build up simulations over the landing gear development program, from the initial specification to in-service problem solving.

The current simulation software capability has different subsystems that can be coupled together to build models that are suitable for the integrated analysis of specific scenarios. Analysis scenarios range from single landing gear, which can be used to examine drop or dynamometer tests, to complete aircraft formulated to examine all phases of take-off, landing, and ground maneuvering. GearSim includes an aircraft control surface trimming routine, enabling quasi-static loads analysis and prediction of dynamic behavior, allowing model validation throughout the development program.

2.4.1 Typical Scenarios

- Drop tests
  - Spinning wheel
- Rig tests
  - Steering, braking and subsystem
- Whole aircraft
  - Flight test cases
    - Take-off and landing
    - Crosswind landings
    - Gusts and turbulence
    - Carrier operations
- Shimmy and gear walk analysis
- Hard landings and accident investigations

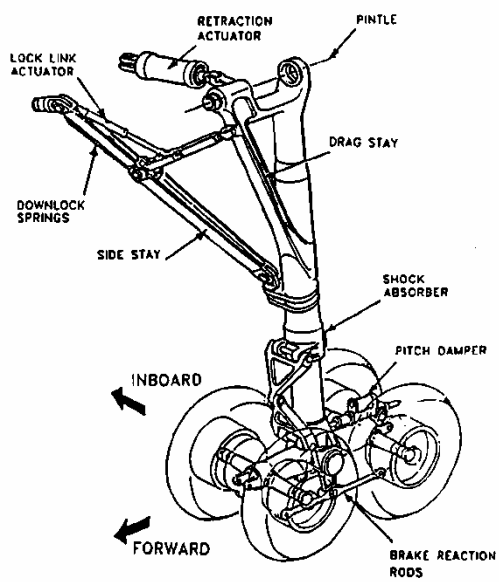

2.4.2 Subsystem Models

The software can provide a high fidelity integrated model which consists of an airframe, control surfaces, flight control system, engines and landing gear, with full nonlinear, 6-DoF and flexible dynamics. Meanwhile, to provide maximum flexibility, the software includes many different subsystem variants, enabling simulation of a wide variety of landing gear designs. The subsystems that are modeled are listed below, with a short description of each.

Subsystem	Variant	Description
Aircraft or Test	Drop test	1 or 2 degree of freedom mass with lift simulation
	Rig test	Fixed displacement test for subsystem testing, shimmy analysis, etc.
	Rigid	Rigid aircraft with linear aerodynamic coefficients
	Nastran	Nastran normal modes solution of full aircraft
Leg	Rigid	Rigid description of the leg
	Flexible	Finite element description built from parametric description of the leg
Oleos	Single stage	Explicit model of gas spring and damper flow
	Multi stage	Explicit model of gas spring and damper flow with various damping devices
	Lookup	Characteristics modeled through stiffness and damping lookup curves
Single Wheel	Shock tube	Shock absorber (oleo) contained inside leg (rigid or flexible)
	Levered	Levered suspension with oleo separate from leg (rigid or flexible)
Twin Wheel (Diablo)	Shock tube	Oleo contained inside leg (rigid or flexible)
	Levered	Levered suspension with oleo separate from leg (rigid or flexible)
Bogie/Trucks	4-Wheel	4 wheel with optional steering (rigid or flexible)
	6-Wheel	6 wheel with optional steering (rigid or flexible)
	Definable	Variable-geometry wheel assembly model with topology defined by user

Subsystem	Variant	Description
Pitch Damper	Conventional	Pitch damper hydraulics
	Rocking truck	Special model of specific system
Steering	Rack/Pinion	Detailed rack-and-pinion steering model including hydraulic model
	Push-Pull	Detailed push-pull steering model including hydraulic model
	Bogie	Simplified model of bogie steering that does not include hydraulic model
Brake	Normal	Detailed friction and brake hydraulic model with actuators, stator mode, and hydraulic pipe transport delays via method of characteristics
Antiskid	Mark 1	Linear velocity error antiskid algorithm
	Mark 2	Nonlinear slip ratio feedback control antiskid algorithm
	Definable	Users can provide and connect their own proprietary antiskid algorithm
Tires	Simple	Point contact with lateral and longitudinal friction
	Brush Model	LuGre dynamic friction model for longitudinal friction
	Shimmy	Includes string theory and shimmy model for lateral friction
	Pacejka	Pacejka Magic Formula model
Runway	Simple	Large bumps and varying runway friction defined per tire or for all tires
	Enveloping	Model to evaluate effect of low wavelength surface irregularities
Propulsion	Simple	Thrust reversers, asymmetric thrust, force and moments due to engine
	Nonlinear	Models each chamber of engine and connects to overall hydraulic system
Flight Control System	Simple	Flight control laws integrated with 6-DOF rigid aircraft Simulink model or coupled Nastran aeroelastic aircraft model
	Definable	Users can provide and connect their own proprietary flight control laws
Hydraulic Actuation Systems	Single-ram	Interconnected duplex system with up to 8 control surface actuation
	Dual-ram	Dual-ram or single-ram systems available for each control surface

2.4.3 Simulation Input Variables

The GearSim GUI enables users to define all of the modeling parameters for each of the subsystems described above. Users also define the following inputs with respect to time, distance or velocity:

- Runway profile
- Runway friction
- Aerodynamic control surface deflections
- Engine thrust / reverse thrust
- Brakes, either brake pressure or antiskid demand
- Steering angle demand

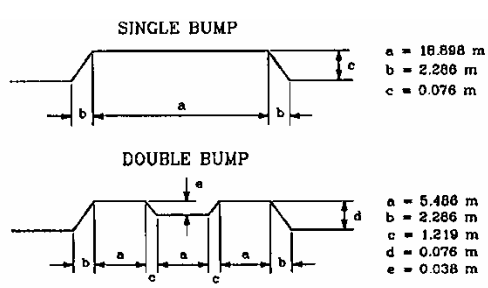

2.4.4 Simulation Outputs

The list of model outputs includes, but is not limited to:

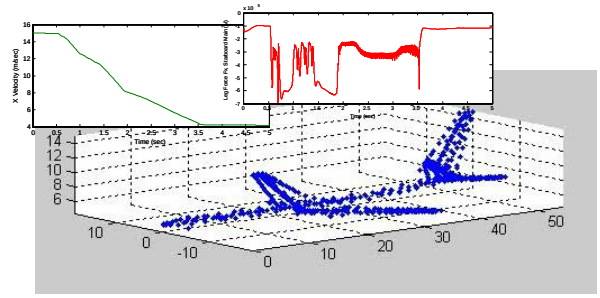

- Aircraft position and motion
- Ground loads
- Landing gear system positions and motions
- Landing gear system component loads
- System parameters; hydraulic pressures and flows, electrical variables
- Oleo gas pressures
- Brake temperatures and stator vibrations
- Frequency and stability analysis of shimmy and gear walk events
- Integrated loads for tire or brake energy absorption and tire wear analysis

2.5 Software Compatibility and Implementation

Both rigid and flexible aircraft models are supported by GearSim. A 6-DOF rigid body aircraft model with flight control system can be directly defined and solved within GearSim. For simulations requiring flexible aircraft, Nastran linear aeroelastic aircraft models can be imported, or GearSim can be used alongside any external software for FE/CFD/landing gear fully coupled simulations.

2.5.1 Solution with Nastran

Coupling GearSim with a Nastran aeroelastic model utilizes the following approach:

- Generate Nastran aeroelastic aircraft model
- Import the required aircraft structural and aerodynamic matrices from Nastran into GearSim
- GearSim automatically generates a Reduced Order Model (ROM) and transfers the model into the time domain
- GearSim aircraft module couples the landing gear model and calculates the flexible aircraft dynamics

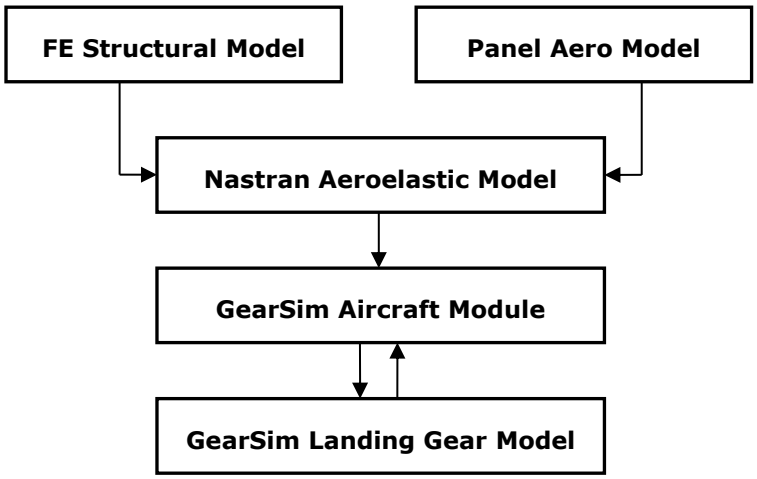

In this approach shown in the chart above, the majority of the user's time is spent preparing the FE and aerodynamic models. When the required modal and aerodynamic database is generated by Nastran, it is used directly by the GearSim aircraft module, and does not require additional Nastran runs.

2.5.2 Solution with FE/CFD Code

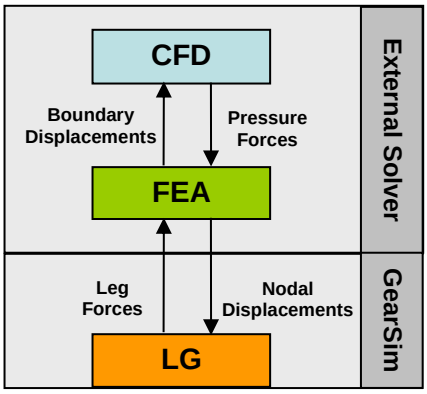

GearSim can provide high-fidelity nonlinear aeroelastic solutions through integration with external FE/CFD codes. The nonlinear landing gear analysis is coupled with the external FE/CFD solver by using a staggered simulation approach. In this approach, GearSim calculates the nonlinear landing gear behavior and the external solver calculates the flexible aircraft dynamics and aerodynamic effects. This allows the various modules to communicate without requiring any significant modifications to the external solver. This approach has been validated and is applicable to any industry standard FE or CFD code.

This approach requires detailed FE modeling around the connection points between the aircraft and its landing gear. As this approach is computationally expensive, it is suitable only for simulation of highly complex aeroelastic / landing gear problems.

3 APPLICATIONS AND FUTURE DIRECTION

GearSim can be used to simulate test points that are required in the certification process, and therefore reduce the number of actual flight and ground tests performed. GearSim can also be used to explore the interactions between the complex, nonlinear subsystems that play an important role in adverse landing gear behaviors. The software has been validated against several specific commercial aircraft and for particular ground operation cases, and against military aircraft flight test and individual component subsystem test data. In order to enhance the reliability of the software tool for generic applications, additional validation will be conducted to cover a wider range of configurations and cases.

The scope of GearSim will potentially be extended to include further subsystem types and ground operational scenarios. The following is a list of desired features that can ultimately be integrated into GearSim's ground loads and landing gear analysis capabilities:

- Advanced features of the propulsion system, including thrust vectoring, integration of propulsion aerodynamics with CFD, and exhaust gas recirculation in V/STOL ground mode
- Extensions of the flight control system and actuation system models, including extended modeling of the hydraulic supply systems, Power-by-Wire (PBW) actuation systems (EMA, EHA), and modeling of electric power supply
- Pilot inputs, active inceptor model, and human pilot models
- Advanced carrier operations including moving deck, ski ramp, catapult and arrestor wires
- Drag chute deployment on landing, soft field simulation, and runway surface treatments
- Simulation of wet runway wheel spray and engine water ingestion
- Electric braking systems and advanced antiskid systems
- Input of flight data recorder data for incident investigations
- Application to real-time flight simulation of takeoff, landing, carrier, and ground operations

GearSim can be coupled with aircraft models of varying complexity, so that a suitable fidelity can be selected for the specific type of problem. For example, communication with industry standard structural finite element and aerodynamic panel codes allows GearSim to be utilized during the aircraft design and ground loads certification stages. Communication with software relying on finite element methods coupled with CFD can be used for very detailed and focused problems. This focus on software integration and adaptability will be continued as GearSim is further developed to integrate with additional

industry standard software packages and to increase the applicability of GearSim to all relevant aircraft ground loads and landing gear analysis problems.

4 CONCLUSION

GearSim, a ground loads and landing gear dynamic analysis software tool, has been developed under several USAF SBIR Phase I and Phase II programs. This commercial-quality software tool provides a platform for the integrated design and analysis of landing gear and all associated subsystems. Landing and high speed taxiing conditions are of particular interest to various design and testing organizations who seek an improved ground loads prediction software tool. Landing gear design and analysis tools are often limited to subsystem design or purely focused on structural loads and dynamics. Consequently, ground and flight tests must be frequently relied upon to identify any potentially problematic coupling between the various subsystems, landing gear structural dynamics, and aircraft aeroservoelastics.

The high fidelity landing gear modeling and analysis software presented in this paper has the potential to become an important and necessary tool to identify and solve complex landing gear problems. As a stand-alone validated software tool, it is capable of processing a comprehensive model of the landing gear system and simulating its dynamics efficiently and accurately. When combined with industry-standard, whole aircraft FE or CFD analysis codes, it provides a means to perform fully integrated landing gear and aircraft aeroservoelastic analysis for the accurate prediction of ground loads that is required for aircraft design and certification.

5 REFERENCES

1. Cowling, D. and Shepherd, A. “The Prediction of Landing Gear Behavior using Dynamic Simulation.” Royal Aeronautical Society International Forum on Aeroelasticity and Structural Dynamics. Manchester, U.K. June 1995.

2. Catt, T., Cowling, D. and Shepherd, A. “Active Landing Gear Control for Improved Ride Quality during Ground Roll.” AGARD Specialists’ Meeting on Smart Structures for Aircraft and Spacecraft. Lindau, Germany. October 1992.

3. Shepherd, A., Catt, T. and Cowling, D. “An Aircraft Landing Gear Simulation Parametric Leg Model.” UK Simulation Society Conference on Computer Simulation. Cumbria, U.K. September 1993.

4. Nichols, D.E.H. Aircraft Landing Gear Simulation Program: A320 Drop Test Validation (Stirling Dynamics Technical Report SDL-100-TR-13 Issue 1). Bristol, U.K.: Stirling Dynamics Ltd. June 1991.

5. Pfeil, A.L. and Smith, S. Landing Gear Analysis Correlations and Assessments: A320 Nose and Main Gear Droptest Prediction (Stirling Dynamics Technical Note SDL-238-TN-2 Issue 1). Bristol, U.K. Stirling Dynamics Ltd. December 1994.

6. Pfeil, A.L. and Smith, S. Landing Gear Analysis Correlations and Assessments: A320 Flight Trial Predictions (Stirling Dynamics Technical Report SDL-238-TR-1). Bristol, U.K. Stirling Dynamics Ltd. January 1995.